Generator. Technik. Systeme.

Built-in generators with switch cabinet for permanently installed power generation systems ≥ 12 kVA in fire engines

DWG (BL) 13/7-2 ZE
to
DWG (BL) 40/14-4 ZE

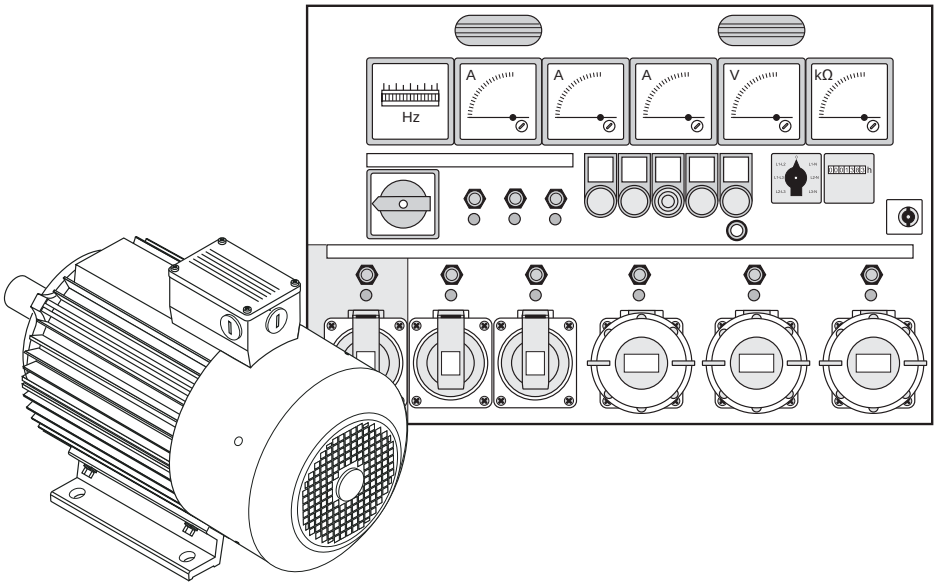

Installation and operating manual

English 07/2011

Legend, safety instructions

This operating manual contains information you must observe for your own personal safety and to prevent material or property damage. The information concerning your own personal safety is emphasised with a warning triangle. Information about material or property damage without personal injury appears without a warning triangle. Depending on the hazard class, the warning information is shown as follows in descending order.



⚠ Danger

Means that death or serious bodily injury will occur if the appropriate precautionary measures are not met.



⚠ Warning

Means that death or serious bodily injury can occur if the appropriate precautionary measures are not met.



⚠ Caution

Means that minor bodily injury can occur if the appropriate precautionary measures are not met.



Important

Means that property damage can occur if the appropriate precautionary measures are not met.



Note

Means that an unexpected event or condition can arise if the appropriate information is not followed.

If more than one hazard class arises, the warning level with the highest level is always the one used. If a warning of injury to personnel in a warning notice with warning triangle appears, an additional warning about material or property damage can be attached to the same warning notice.

Contents

Legend, safety instructions 2

Important information and notes 6

Qualified personnel 6
Intended use 6
Validity of the manual 7
Copyright 8
General note 8
Manufacturer's address 8

Safety instructions 10

References to norms and directives 14

1 Description of power generation system 16

1.1 Components 16
1.2 Circuit diagram 16
1.3 Drive types, generator 18
1.3.1 Connection via drive shaft 18
1.3.2 Drive via hydraulic motor 18
1.3.3 Drive via belt pulley 18
1.4 Generator 19
1.4.1 Function 19
1.4.2 Mechanical versions 19
2-pole generators 20
4-pole generators 20
1.5 Switch cabinet 21
Legend for figures 3, 4 and 5: 22

2 Technical data 24

2.1 Generators 24
2.2 Generator controller 25
2.3 Switch cabinet 25

3 Installation of generator 26

3.1 General safety instructions 26
3.2 Requirements on the installation position 28
3.3 General provisions for installation 28
3.4 Permissible installation positions 30

3.5 Installation of generators of model 132 31
3.5.1 Installation dimensions and assembly 31
3.5.2 Minimum clearances and cooling provisions 32
Minimum clearances 32
Temperature and pressures of the cooling air 33
3.5.3 Assembly instructions, coupling via drive shaft 34
Assembly example 1: R+W drive shaft with clamping hub connection 36
Assembly example 2: R+W drive shaft with cone hub connection 37
3.5.4 Assembly instructions for hydraulic drive 38
Preparatory disassembly 38
Assembly 38
3.5.5 Assembly instructions for belt drive 40
3.6 Installation of generators of model 160 42
3.6.1 Installation dimensions and assembly 42
3.6.2 Minimum clearances and cooling provisions 43
Minimum clearances 43
3.6.3 Temperature and pressures of the cooling air 44
3.6.4 Assembly instructions, coupling via drive shaft 45
3.6.5 Assembly instructions for hydraulic drive 45
3.6.6 Assembly instructions for belt drive 47

4 Installation of switch cabinet and electrical connection 49

4.1 General safety instructions 49
4.2 Requirements for the installation location 52
4.3 General provisions for installation 52
4.4 Installation 52
4.5 Electrical connection 53
4.5.1 Instructions, laying of cables 53
4.5.2 Instructions, connecting the generator 54
4.5.3 Instructions for connecting the switch cabinet 55

5 Operation 56

5.1 General safety instructions, operation 56
5.2 Permissible operating conditions 59
5.3 Working safely with electrical devices 60
5.4 Electrical safety devices, safety measures 62
5.5 Power generation system operation 63
5.5.1 Power sockets, controls and displays 63
5.5.2 Power distribution and connection of devices 65
5.5.3 Warning / disconnect with faulty insulation 69
5.5.4 Check insulation monitor 70
5.5.5 Protective earth check for devices of protection class I 71
5.6 Checking the generator 72
5.6.1 Description 72
5.6.2 Procedure 73

6 Care and maintenance 74

6.1 Maintenance overview 75
6.2 General safety instructions, care and maintenance 76
6.3 Visual check / cleaning work performed by the user 77
6.4 Maintenance work carried out by authorised personnel 78
6.4.1 Replacing the ball bearings 79

7 Repairs 79

8 Disassembly 80

8.1 Safety instructions 80
8.2 Disassembly 80

9 Transport and storage 81

9.1 Generator 81
9.2 Switch cabinet 82

10 Decommissioning, storage, disposal 83

10.1 Disposal instructions 83
Generator 83
Switch cabinet 83

11 Spare parts 84

11.1 Generator 84

12 Index 85

Important information and notes

Qualified personnel

The unit or system may be installed and operated in connection with this manual. Installation, commissioning and operation of a unit or system must only be performed by qualified personnel.
Qualified personnel within the meaning of the technical safety information in this manual are persons with the authorization to put devices, systems and circuits into service, to ground them, and to label them, according to technical safety standards.

Intended use

The power generation systems described in this manual comprise a generator with controller and the associated switch cabinet. These power generation systems are designed exclusively for use as permanently installed power generation systems in fire engines.

- Only use the generators for mains backup operations or for providing current to mobile distribution systems. Only use the power generation system in accordance with the voltage and performance data on the rating plate.
- Do not connect the power generation system to supply other energy distribution or generator systems (e.g. domestic installations, distribution boards on building sites, other generators, or the public electricity supply network).
- Only operate the generator at the nominal speed.
- Only use the power generation system for the uses indicated here and only in accordance with the information in this operating manual. All other uses are not as intended and are not allowed.

In the event of improper use or misuse of the current generator or individual components thereof, the Generator. Technik. Systeme. GmbH & Co. KG cannot take any responsibility.

Validity of the manual

This manual applies exclusively for built-in generators of the types listed below which are delivered completely with the associated switch cabinets and are designed exclusively for use as permanently installed power generation systems in fire engines. In this manual, the different generator types are distinguished by their type designation and their model.

Two-pole execution (nominal speed 3,000 U/min)	Four-pole execution (nominal speed 1,500 U/min)
• DWG (BL) 13/7-2 ZE	• DWG (BL) 13/7-4 ZE
• DWG (BL) 17/7-2 ZE	• DWG (BL) 17/7-4 ZE
• DWG (BL) 23/12-2 ZE	• DWG (BL) 23/12-4 ZE
• DWG (BL) 30/15-2 ZE	• DWG (BL) 30/15-4 ZE
• DWG (BL) 40/14-2 ZE	• DWG (BL) 40/14-4 ZE

Copyright

Without the express approval of Generator.
Technik. Systeme. GmbH & Co. KG, no part of this operating manual may be distributed, published or transmitted, irrespective of the type and the means by which this occurs.

© 2003-2011 Generator. Technik. Systeme. GmbH & Co. KG.
All rights reserved.

General note

Technical changes after going to press are not taken into account.
We reserve the right to make changes.
Version: July 2011

Manufacturer's address

We are more than happy to provide information, assistance, service and ordering assistance.

Generator. Technik. Systeme. GmbH & Co. KG
Ziegelfeldstraße 62 + 65
73563 Mögglingen (Germany)

Tel +49 (0) 7174 8 98 00-0
Fax +49 (0) 7174 8 98 00-25
www.gts-generator.com
info@gts-generator.com

Dear customer,

Generator. Technik. Systeme. GmbH & Co. KG is a technically leading manufacturer of power generation systems and produces generators from 4 to 40 kVA and electronic control units of its own design. GTS generators are highly durable and of the highest quality. They are maintenance-free, long-lasting, precise and robust.

Only high-quality parts that meet the requirements of VDE tests and DIN and European norms are used in the manufacture of the power generation system.

All information in this operating manual has been composed and verified carefully to the best of our knowledge. Before installation, commissioning and use of the current power generation system please read the operating manual closely.

Generator. Technik. Systeme. GmbH & Co. KG cannot take any responsibility for any application contrary to the descriptions in this operating manual nor for damage arising from incorrect operation and management, incorrect installation, failing to use the unit as intended, prohibited technical modifications or due to repairs by unauthorised personnel.

If you have questions, please get in touch with
Generator. Technik. Systeme. GmbH & Co. KG.

Best regards

Generator. Technik. Systeme. GmbH & Co. KG

Safety instructions

This section contains a compilation of generally valid safety instructions. Please read and heed the safety instructions before installation, commissioning and operation of the generator carefully. This safety instructions also appears in the relevant areas of the text in the manual.



Important

Before installing and using the power generation system, please read the operating manual fully and carefully. Only use the generator and the switch cabinet for the uses listed in the sections on "intended use" and only in accordance with the information in the operating manuals.



⚠ Danger

Danger to life through electric shock

- During operation, the power generation system generates voltages that are potentially fatal.
  - ► **Never** touch the generator, the switch cabinet or the devices attached to the power generation system with wet hands during operation.



⚠ Danger

Danger to life through electric shock

- The emergency power socket which is given a special label is not protected by the insulation monitor. For this reason, only the "electrical separation" protective measure is effective for this power socket.
  - ► Only connect a single consumer to the emergency power socket. Failing to do so will suspend the protective measure.



Danger

Danger to life through electric shock

- Working on the generator or switch cabinet, visual inspections for maintenance purposes or cleaning work on the power generation system during operation can lead to potentially fatal injuries through electric shock.
  - ► Switch off the drive unit before performing any inspection or maintenance work on the generator or switch cabinet. Prevent the drive unit from being switched back on by accident (e.g. remove the ignition key and keep somewhere safe).



Danger

Danger to life through electric shock

- A grounding of the neutral conductor of the generator (N, neutral conductor) invalidates the “electrical separation” protective measure.
  - ► Never ground the neutral conductor of the generator.



Danger

Danger to life through electric shock

- Insulation monitors can mutually influence each other.
  - ► Do not connect any other insulation monitors downstream of the power generation system.



⚠ Warning

Risk of injury and risk of damage!

- Inadequately qualified persons are at risk when working on the generator or switch cabinet and may damage the generator.
  - ► The assembly, connection and commissioning of the power generation system and work on the electrical systems may only be carried out by authorised, qualified and specially trained personnel.
  - ► Carry out all connection work according to applicable national regulations (in Germany: these include VDE specifications).



⚠ Warning

Risk of injury

- When protective coverings are not in use, there is a risk of injury through electric shock, moving parts and hot surfaces.
  - ► Only operate the generator with the fitted protective coverings proscribed for the drive in the regulations.



⚠ Warning

Risk of explosion

- A discharge of sparks during operation is possible.
  - ► Do not operate the generator in environments where there is a risk of explosion.



⚠ Warning

Risk of accident

- Devices which start up in an uncontrolled fashion can put persons at risk or injury them or cause damage or themselves be damaged.
  - ► Switch off all devices before you connect them to the power generation system.



⚠ Warning

Danger to life caused by electric shock and risk of damage.

- Water from a high-pressure cleaner can lead to the destruction of the switch cabinet or electric shock.



  ► Never expose the generator or switch cabinet to high-pressure cleaner.



⚠ Caution

Burn hazard

- Parts of the generator can become very hot during and after the operation.
  ► Allow the generator or parts of the generator to cool down before you touch them.



Important

- These generators are not suitable for supplies to fixed distribution networks.
- These generators are designed for a certain performance and speed. They can be destroyed by voltage peaks and overloads.
  ► Do not use the generator to supply building-site distribution boards or other fixed distribution networks (e.g. domestic installations).
  ► Never connect the generator to the public electricity grid or combine with other power generation systems.
  ► Never combine multiple generators.

References to norms and directives

The generator has been manufactured in accordance with the following norms and directives.

- DIN 14686 “Firefighting equipment - Switch cabinets for fixed generators (generating sets) >= 12 kVA in fire-brigade vehicles”. As well as the DIN 14686 mentioned above, the following norms and directives are also of importance and are to be followed during the operation. These are also referenced within DIN 14686.
- DIN 14555-3 “Vehicles carrying tools and gears ”
- DIN 6280-10, Reciprocating internal combustion engines; generating sets with reciprocating internal combustion engines; small power generating sets; requirements and tests
- DIN 49442, Two-pole watertight power sockets with earthing-contact, 10 A, 250 V and 10 A, 250 V-, 16 A, 250 V; principal dimensions
- DIN EN 50014 (VDE 0170/0171, Part 1) Electrical equipment for use in potentially explosive atmospheres- general requirements:
- DIN EN 60051-1, Direct acting indicating analogue electrical measuring instruments and their accessories
- DIN EN 60309-1 (VDE 0623, Part 1), Plugs, power sockets and couplers for industrial purposes -Part 1: general requirements
- DIN EN 60309-2 (VDE 0623, Part 20), Plugs, power sockets and couplers for industrial purposes-Part 2: dimensional interchangeability requirements for pin and contact-tube accessories
- DIN EN 60034, Rotating electrical machines
- DIN VDE 0100 (VDE 0100), requirements for the installation of high-voltage systems with nominal voltages of up to 1,000 V
- DIN VDE 0100-430 (VDE 0100, Part 430), installing high-voltage machines with nominal voltages of up to 1,000 V protective measures- protecting cables and lines in the event of an overcurrent

- DIN VDE 0100-551 (VDE 0100, Part 551), electrical installations of buildings - Part 5: selection and installation of electrical equipment-Chapter 55: other equipment-main section 551: low-voltage power supply systems
- DIN VDE 0105-100, operating electrical installations
- DIN VDE 0470-1 (VDE 0470, Part 1), protection class provided by enclosures (IP code)
- BGV A 2, Electrical installations and equipment
- GUV 2.10, Accident prevention requirement “Electrical installations and equipment” with instructions for implementation

1 Description of power generation system

1.1 Components

The power generation system comprises the following units
- Generator ⇨ section 1.4, page 19
- Switch cabinet ⇨ section 1.5, page 21

1.2 Circuit diagram

The circuit diagram shown below shows the minimum equipment as per DIN 14686. Your power generation system may be different featuring additional options.

The exact equipment of your generator
⇨ in the Appendix, or
⇨ switch cabinet of the enclosed circuit diagram.

Built-in generators with switch cabinet for permanently installed power generation systems ≥ 12 kVA in fire engines

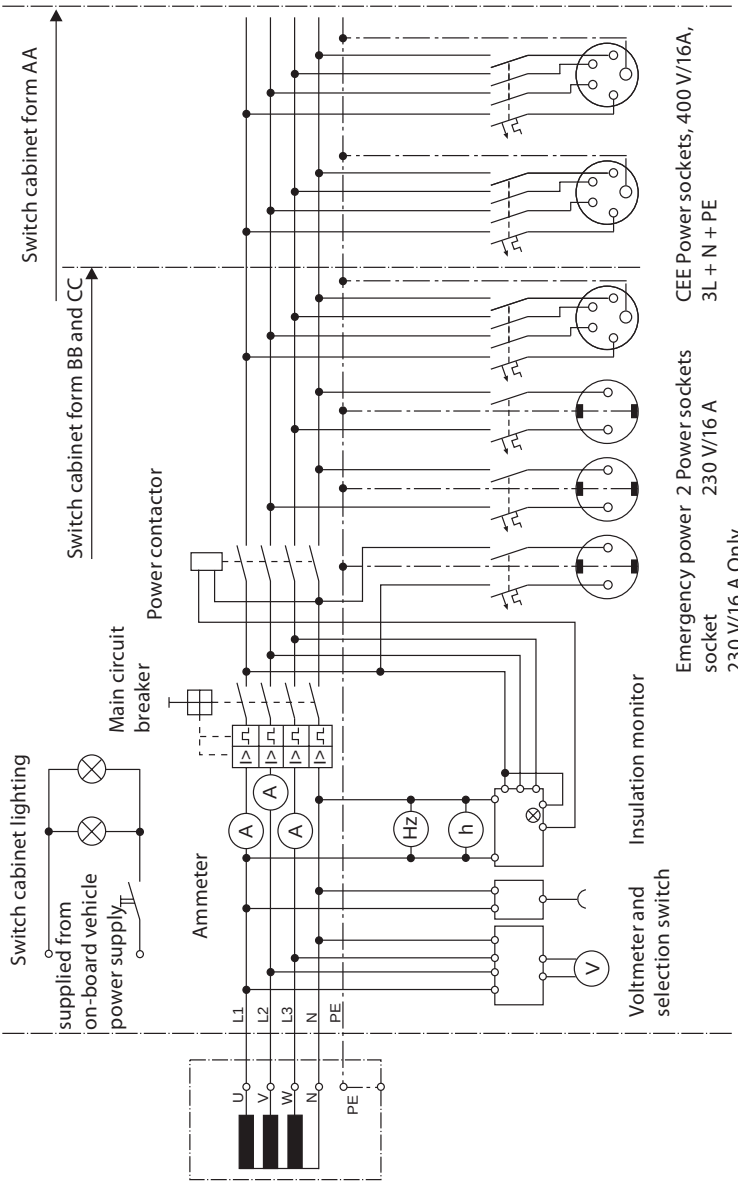

Figure 1 Circuit diagram, power generation system (minimum equipment as per DIN 14686)

1.3 Drive types, generator

The generator can be powered in various ways.
Installation and required components depend on the drive type
⇨ chapter “Installation of generator”, page 26.

1.3.1 Connection via drive shaft

The shaft on the generator is joined to the drive shaft of the drive unit via a cardan shaft. The generator runs at the same speed as the drive unit. The drive unit must have a suitable and constantly regulated speed in order to avoid operating the generator at an under or overspeed which can impair the function of the generator or may even damage it.

1.3.2 Drive via hydraulic motor

The generator is driven by a hydraulic motor. The hydraulic motor is fed from a hydraulic system. Do not operate the generator at an overspeed. Operation at an overspeed can have negative consequences for the functioning of the generator or may damage it.

1.3.3 Drive via belt pulley

The generator is joined to the drive unit via a belt pulley and a belt. The belt drive is an especially simple and cost-effective means of transmission. It also offers the advantage that, by selecting the transmission ratio, it is possible to optimally adjust the speeds of the drive unit and generator to each other.

1.4 Generator

1.4.1 Function

- The generators are brushless, self-excited synchronous inner-pole generators, which are electronically-controlled.
- The voltage supplied by the generator is regulated by the built-in electronic generator controller so that the output voltage between idle speed and the nominal load meets the requirements of IEC 38. This equates to a quality standard which is comparable with the public electricity supply network. The constancy of the output frequency is dependent on the speed constancy of the drive unit.
- If the generator sustains a temporary overload (below the actuation time of the protective circuit breaker) or if devices are connected to the generator with excessive power draw or excessive start-up power draw, the generator controller will automatically restrict the power output (by reducing the exciter field current) and reduce the output voltage.
- The generators meet the EMC directives EN ISO 14982, ISO TC 127/ISO FDIS 13766/DIN EN 13909 and other EMC standards referenced in these norms.
- The generators are cooled by self-ventilation independent of the direction of rotation. The cooling air is drawn through the cooling profiles by the fan wheel on the rear side of the generator and across the housing, towards the front side.

1.4.2 Mechanical versions

Depending on their nominal output, the generators are constructed in various model sizes. Depending on the model, there installation of the generator may vary. Reference is made to these deviations in the corresponding sections of this manual.

The following table and Figure 2 give an overview of the most important features of the generators.

2-pole generators

	DWG (BL) 13/7-2 ZE	DWG (BL) 17/7-2 ZE	DWG (BL) 23/12-2 ZE	DWG (BL) 30/15-2 ZE	DWG (BL) 40/14-2 ZE
Output	13 kVA	17 kVA	23 kVA	30 kVA	40 kVA
Model	BG 132	BG 132	BG 160	BG 160	BG 160
Number of poles	2	2	2	2	2
Drive speed	3000 1/min	3000 1/min	3000 1/min	3000 1/min	3000 1/min

4-pole generators

	DWG (BL) 13/7-4 ZE	DWG (BL) 17/7-4 ZE	DWG (BL) 23/12-4 ZE	DWG (BL) 30/15-4 ZE	DWG (BL) 40/14-4 ZE
Output	13 kVA	17 kVA	23 Kva	30 kVA	40 kVA
Model	BG 132	BG 160	BG 160	BG 160	BG 160
Number of poles	4	4	4	4	4
Drive speed	1500 1/min	1500 1/min	1500 1/min	1500 1/min	1500 1/min

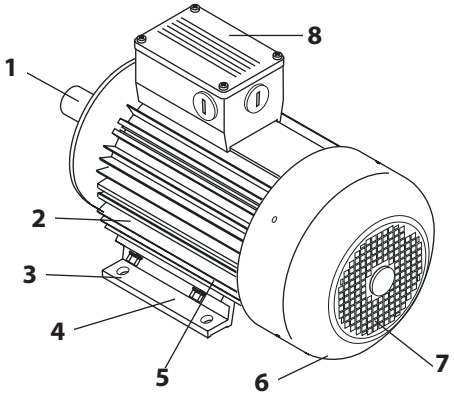

1 Drive shaft
2 Mounting profile (all around, every 45°)
3 Drain hole for condensation water (if present)
4 Mounting profiles (both sides)
5 Cooling profiles
6 Fan wheel cover
7 Cooling air inlet
8 Terminal box with generator controller

Figure 2 Generator (shown: DWG (BL) 13/7-2-ZE, output 13 kVA)

1.5 Switch cabinet

The switch cabinet is basically possible in three different versions (as per DIN). Additional components can be added to these variants.

The following figures show examples of front panels and components for the possible switch cabinet variants according to DIN 14686.
For the actual execution of your switch cabinet ⇨ Appendix.
A separate operating manual is included with the switch cabinet.

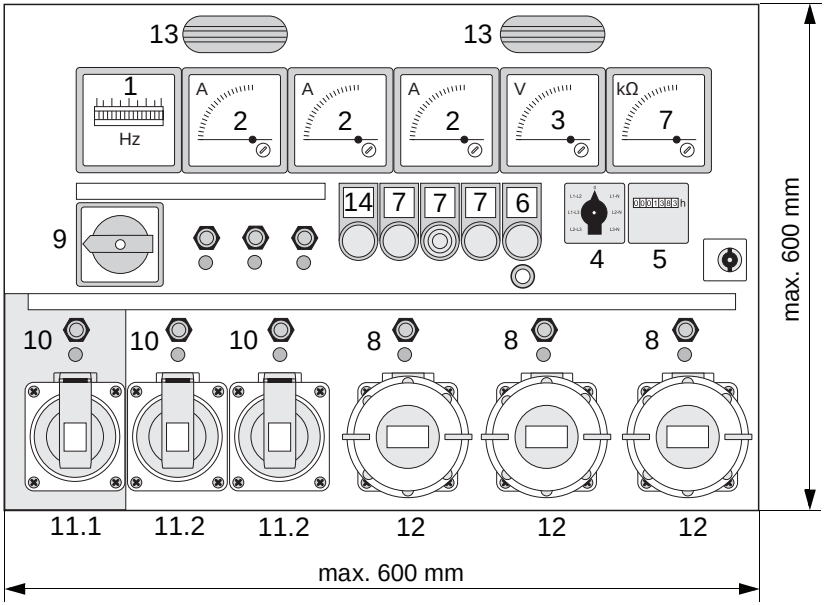

Cabinet depth: max. 210 mm.
Figure 3 Switch cabinet form AA
Legend ⇨ page 22.

Legend for figures 3, 4 and 5:

1	Frequency display
2	Ammeter for each phase conductor (nominal current marked on scale)
3	Voltmeter 0 V to 500 V. Nominal voltage 230 V for measurement L1-N, L2-N or L3-N. Nominal voltage 400 V for measurement L1-L2, L1-L3 or L2-L3.
4	Change-over switch, voltmeter
5	Operating hours counter for generator
6	Protective earth test device with test socket
7	Insulation monitor with optical and acoustic indication, acknowledgment and check button
8	Four-pole 16 A circuit breaker (optional 32 A built-in power socket) with thermal and magnetic tripping for CEE power sockets (No. 12)
9	Four-pole main circuit breaker with thermal and magnetic tripping. Also serves as main switch for manual disconnect
10	Two-pole 16 A line circuit breaker with thermal and magnetic tripping for power sockets (No. 11.1 and 11.2)
11.1	Two-pole power sockets with protective earth, 16 A/250 V. Emergency power socket. Not protected by insulation monitor. Only 1 consumer may be connected!
11.2	Two-pole power socket with protective earth, 16 A/250 V
12	CEE socket (AC), 5-pole with protective earth, 16 A/400 V, 3 L + N + PE (optional 1 32 A power socket)
13	Switch cabinet lighting, supplied by on-board power supply
14	Switch for switch cabinet lighting

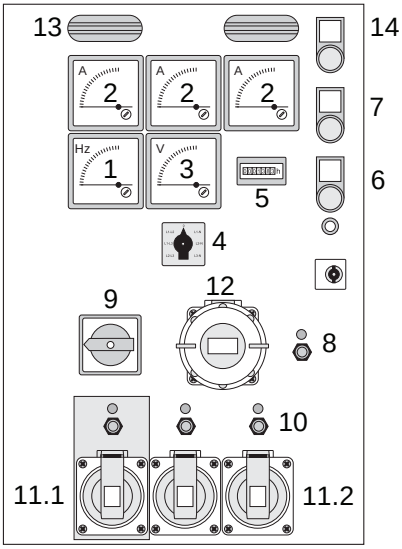

Max. cabinet dimensions (H x W x D): max. 600 x 380 x 210 mm.
Figure 4 Switch cabinet form BB
Legend ⇨ page 22.

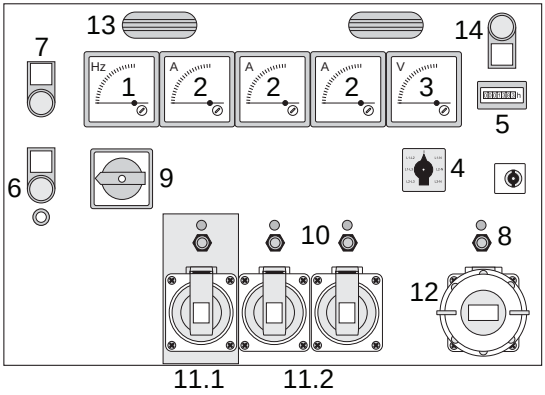

Max. cabinet dimensions (H x W x D): max. 380 x 600 x 210 mm.
Figure 5 Switch cabinet form CC
Legend ⇨ page 22.

2 Technical data

2.1 Generators

2-pole generators

	DWG (BL) 13/7-2 ZE	DWG (BL) 17/7-2 ZE	DWG (BL) 23/12-2 ZE	DWG (BL) 30/15-2 ZE	DWG (BL) 40/14-2 ZE
Nominal output	13 kVA	17 kVA	23 kVA	30 kVA	40 kVA
Nominal voltage	230/400 V				
Rated current	18.8 A	24.6 A	33.3 A	43.4 A	57.9 A
Nominal speed	3,000 min-1				
Rated frequency	50 Hz				
Distortion factor	< 5 %				
Efficiency at cos Phi = 0.8	0.80				
Efficiency at cos Phi = 1.0	0.82				
Protection class	IP54				
Weight approx.	65 kg	84 kg	121 kg	153 kg	184 kg

4-pole generators

	DWG (BL) 13/7-4 ZE	DWG (BL) 17/7-4 ZE	DWG (BL) 23/12-4 ZE	DWG (BL) 30/15-4 ZE	DWG (BL) 40/14-4 ZE
Nominal output	13 kVA	17 kVA	23 kVA	30 kVA	40 kVA
Nominal voltage	230/400 V				
Rated current	18.8 A	24.6 A	33.3 A	43.4 A	57.9 A
Nominal speed	1,500 min-1				
Rated frequency	50 Hz				
Distortion factor	< 5 %				
Efficiency at cos Phi = 0.8	0.80				
Efficiency at cos Phi = 1.0	0.82				
Protection class	IP54				
Weight approx.	86 kg	130 kg	153 kg	178 kg	205 kg

Built-in generators with switch cabinet for permanently installed power generation systems ≥ 12 kVA in fire engines

2.2 Generator controller

Controller type	LCAR4		
Pin assignment (applies for all of the generator types described)	Pin	Color	Function
	1	red	F1
	2	gray	F2
	3	violet	1/2 U
	4	violet	1/2 V
	5	violet	1/2 W
	6		

2.3 Switch cabinet

All switch cabinets meet the protection class IP43 at least.
Equipment and dimensions of switch cabinet ⇨ section “Switch cabinet”, page 21 or loose sheet in the Appendix.

3 Installation of generator

Depending on the model, nominal output, and drive type, there installation may vary. Reference is made to these deviations in the corresponding sections of this manual. Carefully read the safety instructions before installation, commissioning and operation of the generator, Section 3.1, page 26, and all of the applicable sections of this chapter and follow the instructions and information therein.

3.1 General safety instructions



⚠ Danger

Risk of injury and risk of damage!

- Opening or disassembling the generator puts the system at risk and compromises the safety of the user.
  - ► Never open or dismantle the generator.
  - ► The generator may only be opened by the manufacturer or an authority authorised by the manufacturer.
  - ► Only carry out the work described in this manual.





⚠ Danger

Risk of injury and risk of damage!

- Incorrect installation of the generator can lead to malfunctioning, damage or danger.
  - ► Before the installation of the generator read this operating manual completely and carefully.
  - ► The assembly / disassembly of generator as well as the maintenance, service and replacement work may only be carried out by authorised and qualified technicians.
  - ► Only use the generator according to the information in the operating manual and the purposes indicated in the section on “intended use”.

Built-in generators with switch cabinet for permanently installed power generation systems ≥ 12 kVA in fire engines



⚠ Danger

Danger to life caused by making modifications to the generator

- Any modification, incorrect repair or use of unsuitable third party parts shall cause all warranty claims to lapse and the lapsing of the type approval according to the Equipment Safety Act (GSG) and the certification according to EU-/EEC directives.
- The manufacturer cannot assume any liability in such a case.

► Never make modifications to the generator or individual components.

► Only use third party parts expressly approved by the manufacturer for the installation.



⚠ Warning

Risk of injury

- When protective coverings are not in use, there is a risk of injury through electric shock, moving parts and hot surfaces.

► Only operate the generator with the fitted protective coverings proscribed for the drive in the regulations.



⚠ Warning

Risk of injury and risk of damage!

- The use of unauthorised third party parts can lead to malfunctions, damage or danger.

► Only use third party parts expressly approved by the manufacturer for the installation.

3.2 Requirements on the installation position

Single-bearing generators are exclusively for direct attachment to the drive unit. Only attach these generators to drive units that meet the applicable norms,
provisions and directives.
Dual-bearing generators are usually installed near the drive unit.

- Install the generator safely and securely on a 100 % level surface with a load-bearing capacity adequate for the weight class of the generator.
- The generator is designed according to IP54 or IP69k It is not explosion-protected. Do not operate in environments where there is a risk of explosion. Observe all additional regulations in this area.
- Choose a suitable installation location for the generator that adheres to the required minimum clearances, when adequate ventilation is maintained at all times, and where possible, the temperature of the cooling air does not exceed 40 °C.
- Do not spray the generator with high-pressure cleaners. Where possible, position the generator to make it impossible to accidentally spray it with a high-pressure cleaner.



Important

- A cooling air feed above 40 °C can lead to power restrictions; in extreme cases it can cause damage to the generator.
  - ► The temperature of the supplied cooling air should not exceed 40 °C.

3.3 General provisions for installation

The basic requirement for safe, reliable and fault-free operation, electrical and mechanical safety is a technically and materially correct installation of the generator.

Generally the generators run clockwise. In this case, the output voltage has a “clockwise field of rotation”. Generators can also be operated in anticlockwise rotation; the rotary field of the output voltage then switches to “anticlockwise rotation”.
Note the direction of the rotary field when connecting the switch cabinet
⇨ section “Installation of switch cabinet and electrical connection”, page 49!

Built-in generators with switch cabinet for permanently installed power generation systems ≥ 12 kVA in fire engines

The drive system must have sufficient power reserves for the dynamic processes when switching electrical consumers on and off. Its control system must have reliable command over these processes..
Do not change the constructive form and design of the generator.
Mounting surfaces must be precisely flat. Avoid alignment errors during assembly.
After assembly, a test finger as per EN 60034, Part 5, or a foreign particle more than 12 mm diameter (e.g. balls) must not be able to touch rotating parts when this would lead to a hazard. In particular, the safety devices of the power transmission system must be sturdily built and securely assembled. Safety devices must only be removable with a tool.
The cooling air must be supplied and discharged so as to reliably dissipate the arising heat loss. Only non-harmful quantities of dust and water may be drawn in with the cooling air. Avoid short circuits in the airflow.
Observe the specific installation instructions and regulations for the individual generator types.
Do not operate generators with a second shaft end without a properly assembled working machine or protective covering.
Install suitable safety devices for protecting circuits (power sockets) against short circuit and overcurrent in an external switch cabinet for generators without a factory-installed switch box that contains electrical safety devices and power sockets. The neutral conductor N must be secured. Coordinate the type and nominal current of the protective circuit breakers with the generator manufacturer GTS. For more information
⇨ chapter xxx, page xx.
For generators without factory-installed switch box that contains electrical safety devices and power sockets, check the generator, the switch cabinet and the complete electrical installation in accordance with DIN VDE 0100, Part 610, by visiting, testing, and measurement before initial commissioning.

- Generators of model 132: Installation ⇨ section 3.5, page 31.
- Generators of model 160: Installation ⇨ section 3.6, page 42.

3.4 Permissible installation positions

The generator must be monitored on a horizontal surface **standing on the attachment brackets** as shown.

OK

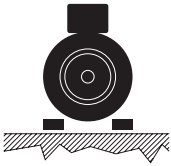

In the normal installation position, the terminal box is positioned on the top side of the generator.

OK

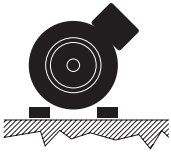

The generator can be installed rotated by 45° or 90° to the left or right, as shown in the accompanying image. Remove the attachment bracket and install in the corresponding mounting profiles.

> Replace the screws with screws of the same grade.

Replacement screws of the same quality are supplied by GTS.

> The screws must be tightened to the correct torque.

- Torque 25 Nm for grade 8.8
- Torque 35 Nm for grade 10.9

OK



Other installation positions are not permitted.







Built-in generators with switch cabinet for permanently installed power generation systems ≥ 12 kVA in fire engines

3.5 Installation of generators of model 132

- To install the generators of model 132, proceed according to the descriptions in this section.
- Prior to installation, read the safety instructions in section 3.1 and sections 3.2 to 3.4 attentively and follow the instructions and information therein.

⚠ Warning

Risk of accident and injury

- Incorrectly attached lifting equipment can lead to accidents.
  - ► Secure the lifting equipment to the generator exclusively using the ring screws provided.
  - ► Only use suitable lifting equipment.

3.5.1 Installation dimensions and assembly

During assembly, observe the minimum clearances and specifications for cooling in the following section.
Dimensions, generator ⇨ drawing sheet in the Appendix.

- Secure the generator with at least four mounting screws (minimum M12 or comparable, bolt grade min. 8.8).
- The attachment must be permanent and resistant to shock and vibrations.
- Use suitable means to prevent the screws from coming undone by themselves, e.g. via a tension ring according to DIN 128.

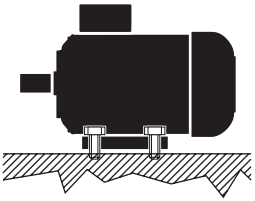

4 Mounting screws

- Tightening torque for mounting screws: M = 25 Nm
- Permissible load of the shaft: Fr_{max} = 2,000N (measured in 50 mm axial clearance from the point where the shaft exits the bearing plate) Fa_{max} = 200 N

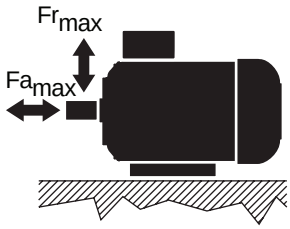

Important

▶ Do not attach any third party parts to the mounting profiles on the generator housing.

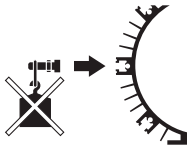

3.5.2 Minimum clearances and cooling provisions

- The generator needs sufficient ventilation for cooling. The cooling air is drawn through the cooling profiles by the fan wheel on the rear side of the generator and across the housing, towards the front side.
- Ensure adequate air feed and exhaust openings.
- Comply with the following minimum clearances and note the regulations for cooling.

Minimum clearances

When installing, respect the following minimum clearances from fixed parts or walls.
⇨ also adjacent figures:

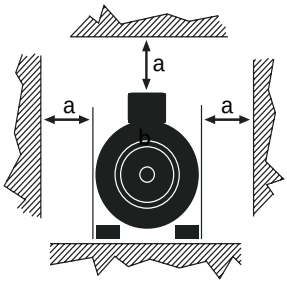

- Both sides and above: a = 100 mm
- Front: b = 200 mm
- Rear : c = 170 mm

Built-in generators with switch cabinet for permanently installed power generation systems ≥ 12 kVA in fire engines

Temperature and pressures of the cooling air

Important

- A cooling air feed above 40 °C can lead to power restrictions; in extreme cases it can cause damage to the generator.
  ► The temperature of the supplied cooling air should not exceed 40 °C.

- A maximum underpressure of P_{max} = 4 Pa is allowed in the suction path of the cooling air, otherwise, a sufficient quantity of cooling air cannot be drawn in.
- In the blow-out area of the cooling air on the front side, a maximum overpressure of P_{max} = 7 Pa may arise as otherwise there will not be sufficient circulation of the cooling air.

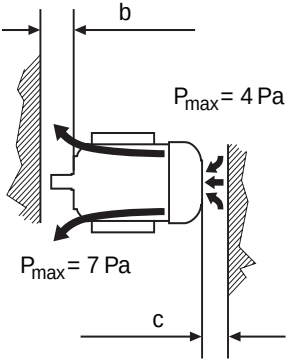

Important

► Do not impair the circulation of the cooling air with other air flows (e.g. from the front or from the side).

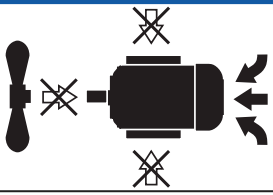

3.5.3 Assembly instructions, coupling via drive shaft



⚠ Danger

Risk of injury

- The rotating couplers of drive shafts are hazard areas.
  - ► Put suitable protective measures in place.
  - ► Never reach into the couplers of rotating drive shafts.
  - ► Switch off the drive unit before performing any inspection or maintenance work on the drive shafts.
  - ► Prevent the drive unit from being switched back on by accident (e.g. remove the ignition key and keep somewhere safe).



Important

► Do not use any sliding grease pastes, oils or greases with molybdenum disulphide or other high-pressure additives.

General function of drive shaft

Drive shafts are flexible couplers used to bridge larger distances between shaft ends. In principal, they consist of two metal bellows couplings and an intermediate tube. The metal bellows balance any lateral, axial and angular shaft offsets. The connecting flanges for the intermediate pipe are gimbal-mounted in the metal bellow coupling.

Built-in generators with switch cabinet for permanently installed power generation systems ≥ 12 kVA in fire engines

Alignment

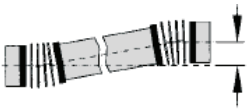

Lateral offset



Axial offset

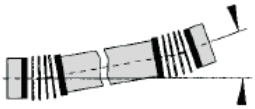

Angular offset

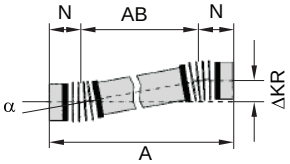

Lateral offset

Important

- Using the utmost care, align the drive shaft to prevent damage to the generator and the drive unit itself caused by excessive forces during operation.
- Ideally, align the drive shaft with laser equipment. The drive shaft can also be aligned and checked with a dial gage, ruler, or a spirit level.

Maximum permissible offset values and forces
⇨ Manufacturer documents of the drive unit and drive shaft.

Maximum permissible forces on the generator shaft
⇨ Assembly instructions for belt drive:

Generators of model 132
⇨ Section 3.5.1, page 31.

Generators of model 160
⇨ section 3.6.1, page 42.

The permissible lateral offset is dependent on the length of the intermediate pipe.
It is computed from the following formula:
$\Delta Kr = \tan\alpha \times AB$, where $AB = A - 2 \times N$

General assembly of and disassembly instructions

- Do not form the metal bellows beyond the permissible values.
- Avoid any use of force.
- The shafts and holes of the driving collars to be connected must be dirt- and burr-free.
- Check the shaft connection dimensions and the tolerances.
- Oil the shaft journals: makes assembly of and disassembly of easier.

Assembly example 1: R+W drive shaft with clamping hub connection

Assembly

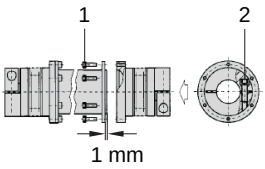

> Slide the metal bellows couplings onto the shafts to be joined.
> If the axial position is correct, tighten the mounting screws [2] with a torque key to the specified moment.
> Insert the intermediate tube. The centering length of the mounting flange is 1 mm.
> Press the metal belows together 1 mm to fit the intermediate tube.
> Tighten the flange mounting screws [1] with a torque key to the specified moment.
> With divided hubs (Mod. ZAE, ⇨ Figure at right), respect the clearance C from the shaft end face to the shaft end face of the shafts to be joined.

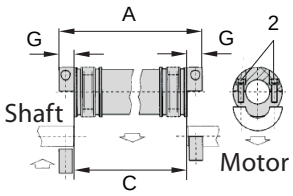

Clearance C = length A-2 x G \[mm]

> Insert the complete drive shaft.
> Tighten the mounting screws [2] with a torque key to the specified moment.

Specified moment
⇨ Manufacturer's description, drive shaft manufacturer

The clamping procedure is now complete.

Important

▶ Do not tighten the mounting screws any further. Doing so could damage the cone hub connection!

Disassembly

> Unscrew the flange mounting screws [1].
> Press the metal bellows together.
> Remove the intermediate tube. Support the intermediate tube where necessary!
> Undo the mounting screws 2]. Remove the metal bellows couplings.

Built-in generators with switch cabinet for permanently installed power generation systems ≥ 12 kVA in fire engines

Assembly example 2: R+W drive shaft with cone hub connection

Assembly

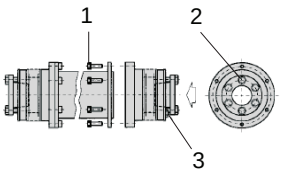

> Slide the metal bellows couplings onto the shafts to be joined.
> If the axial position is correct, tighten the mounting screws [2] with a torque key crossways in three turns,
- first with 1/3 of the torque,
- then with 2/3 and
- finally, to the full specified torque.

Specified moment
⇨ Manufacturer's description, drive shaft manufacturer

The clamping procedure is now complete.

	Important
	▶ Do not tighten the mounting screws any further. Doing so could damage the cone hub connection!

Mount the intermediate tube according to the descriptions for the clamping nub connection.

Disassembly

> Unscrew the flange mounting screws [1].
> Press the metal bellows together.
> Remove the intermediate tube.
Support the intermediate tube where necessary!
> Undo the mounting screws [2] evenly.
> Drive out the cone hub with the three set screws [3].
> Slacken the set screws immediately.

3.5.4 Assembly instructions for hydraulic drive

Preparatory disassembly

> Unscrew two M8 x 45 screws, wrench size 10 mm, (figure 6 [2]). Remove the sleeve [1].
> Unscrew and remove four screws M12 x 12 [3], along with the washers.

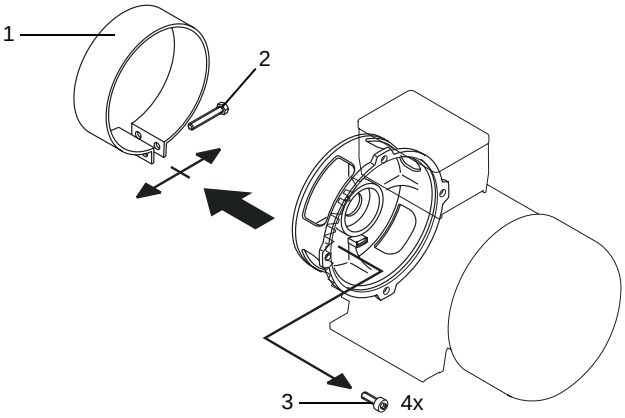

Figure 6 Preparatory disassembly for flange mounting in case of hydraulic drive (generator model 132)

Assembly

> Place the flange (Figure 7 [2]) onto the generator.
> Place a toothed washer [4b] underneath the four screws [4a] and secure with Loctite.
> Place toothed washers [3b] underneath the nuts [3a].
> Place the collar [1] and clamp securely with two screws.
> Mount the first half of the coupling [5] on the shaft at the generator and prevent it from twisting on the shaft using with a key.

Built-in generators with switch cabinet for permanently installed power generation systems ≥ 12 kVA in fire engines

> Mount the washer [6] onto the hydraulic motor [8].
> Place the second half of the coupling [5] to the hydraulic motor.
> Place the hydraulic motor [8] with washer [6] and the second half of the coupling on the generator.
> Where necessary, turn the coupling slightly to ensure the gearing locks.
> Place toothed washers [7b] to eight screws [7a] and secure disk [6] to the flange [2].
> Place the collar [9] onto the coupling unit and tighten firmly with two screws.

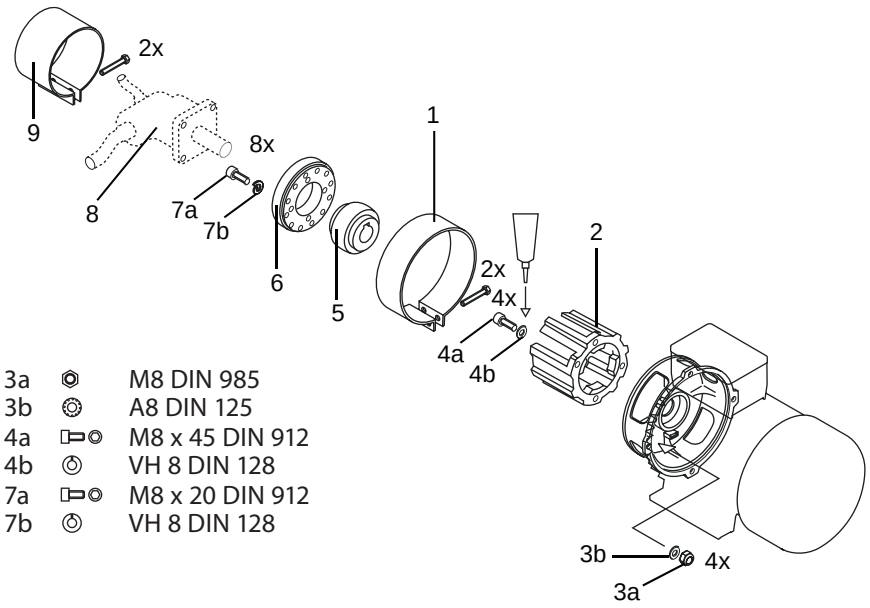

Figure 7 Assembly of flange mount hydraulic drive (generator model 132)

3.5.5 Assembly instructions for belt drive

Warning

Risk of accident

- Open drive belts and pulleys are a hazard.
  - ► Never operate the generator without a protective covering.
  - ► Never reach into a drive belt while it is running.

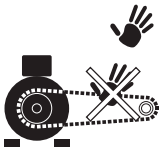

Important

- ► Do not strike the pulley on the shaft.
- ► Taper bushes are preferred for the attachment.

> Secure the belt pulley to the shaft with a key.
> Thread in a screw into the end face of the shaft to secure the belt pulley.
> Prevent this screw from being undone accidentally by placing a suitable locking washer underneath it.

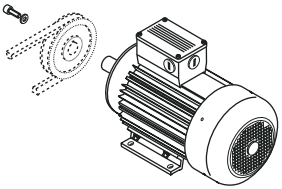

- Threaded hole in the shaft: M10 x 22 mm
- Tightening torque: M = 50 Nm
- 50 mN bolt grade 8.8

Important

- ► The axis of the power shaft must run absolutely parallel to the axis of the generator.
- ► The belt pulleys of both axes must lie flush to each other so that the belt runs absolutely straight.

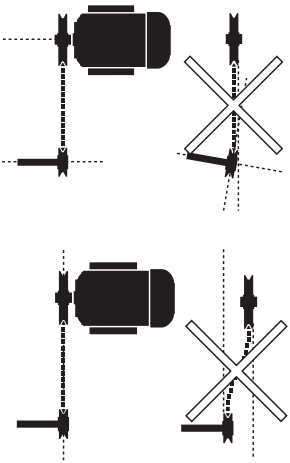

Built-in generators with switch cabinet for permanently installed power generation systems ≥ 12 kVA in fire engines

Important

▶ The drive belt must not sag loosely.

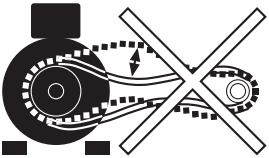

When using narrow belt pulleys of type SPA, the clearance between the axes must not exceed 600 mm. For permissible axis clearances for other belts, ask the manufacturer.

Maximum tension force (tension) of the drive belt on the shaft

F_{max} = 2,000 N at a max. 50 mm axial clearance from the point where the shaft exits the bearing plate. The belt tension must not exceed a radial force of 2,000 N at a max. axial clearance of 60 mm from the point where the shaft exits the bearing plate. If the belt pulley attachment to the shaft is placed further out, reduce the tension of the belt accordingly in order to balance out the increased leverage effect on the shaft.

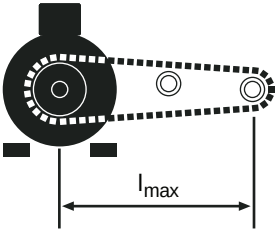

Quantity and type of the belts used

- Adapt the quantity and type of the belts used to the output of the generator.
- Observe the maximum belt tensioning force.

3.6 Installation of generators of model 160

- To install the generators of model 160, proceed according to the descriptions in this section.
- Prior to installation, read the safety instructions in section 3.1 and sections 3.2 to 3.4 attentively and follow the instructions and information therein.

⚠ Caution

Risk of accident

- Incorrectly attached lifting equipment can lead to accidents.
  - ► Secure the lifting equipment to the generator exclusively using the ring screws provided.
  - ► Only use suitable lifting equipment.

3.6.1 Installation dimensions and assembly

During assembly, observe the minimum clearances and specifications for cooling in the following section.
Dimensions, generator ⇨ drawing sheet in the Appendix.

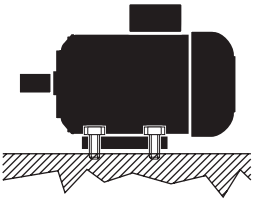

4 Mounting screws

- Secure the generator with at least four mounting screws (minimum M12 or comparable, bolt grade min. 8.8).
- The attachment must be permanent and resistant to shock and vibrations.
- Use suitable means to prevent the screws from coming undone by themselves, e.g. via a tension ring according to DIN 128.

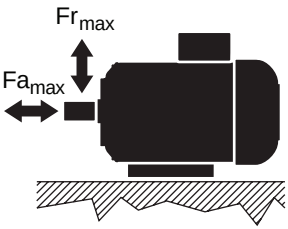

- Tightening torque for mounting screws: M = 87 Nm
- Permissible load of the shaft: Fr_{max} = 5,000 N (measured in 60 mm axial clearance from the point where the shaft exits the bearing plate)
  Fa_{max} = 500 N

Built-in generators with switch cabinet for permanently installed power generation systems ≥ 12 kVA in fire engines

Important

▶ Do not attach any third party parts to the mounting profiles on the generator housing.

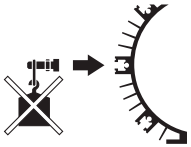

3.6.2 Minimum clearances and cooling provisions

- The generator needs sufficient ventilation for cooling. The cooling air is drawn through the cooling profiles by the fan wheel on the rear side of the generator and across the housing, towards the front side.
- Ensure adequate air feed and exhaust openings.
- Comply with the following minimum clearances and note the regulations for cooling.

Minimum clearances

When installing, respect the following minimum clearances from fixed parts or walls.
⇨ also adjacent figures:

- Both sides and above: a = 100 mm
- Front: b = 300 mm
- Rear : c = 200 mm

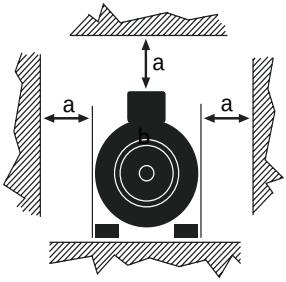

3.6.3 Temperature and pressures of the cooling air

Important

- A cooling air feed above 40 °C can lead to power restrictions; in extreme cases it can cause damage to the generator.
  ► The temperature of the supplied cooling air should not exceed 40 °C.

- A maximum underpressure of P_{max} = 4 Pa is allowed in the suction path of the cooling air, otherwise, a sufficient quantity of cooling air cannot be drawn in.
- In the blow-out area of the cooling air on the front side, a maximum overpressure of P_{max} = 7 Pa may arise as otherwise there will not be sufficient circulation of the cooling air.

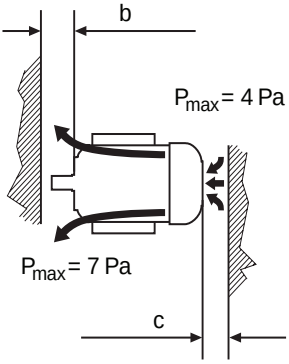

Important

► Do not impair the circulation of the cooling air with other air flows (e.g. from the front or from the side).

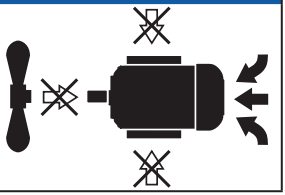

Built-in generators with switch cabinet for permanently installed power generation systems ≥ 12 kVA in fire engines

3.6.4 Assembly instructions, coupling via drive shaft

⇨ section 3.5.3, page 34.

3.6.5 Assembly instructions for hydraulic drive

Preparatory disassembly

Note

► As an alternative to the bearing plate shown here, the generators can also be fitted with a gray cast iron bearing shield. When using a gray cast iron bearing plate, assembly of a hydraulic drive is not possible. Alternatively, a gray cast iron bearing plate can be delivered for these generators.

> Unscrew the four grub screws M12 x 25 (figure 8 [1]).

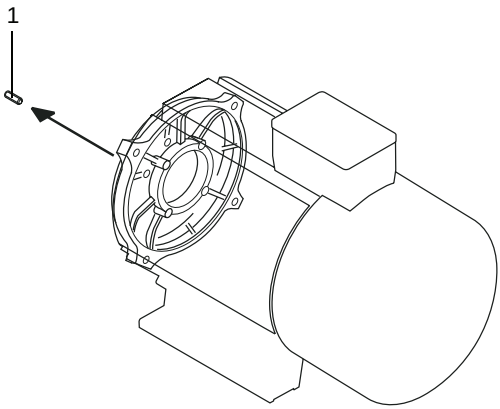

Figure 8 Preparatory disassembly for flange mounting in case of hydraulic drive (generator model 160)

Assembly

> Place the flange (Figure 9 [1]) onto the generator and secure with four screws [2a].
> Place a toothed washer [2b] underneath the screws and secure with Loctite.
> Mount the first half of the coupling [3] on the shaft at the generator and prevent it from twisting on the shaft using with a key.
> Mount the washer [4] onto the hydraulic motor [6].
> Place the second half of the coupling [3] to the hydraulic motor.
> Place the hydraulic motor [6] with washer [4] and the second half of the coupling on the generator.
> Where necessary, turn the coupling slightly to ensure the gearing locks.
> Place toothed washers [5b] to eight screws [5a] and secure disk [4] to the flange [1].
> Place the collar [7] onto the coupling unit and tighten firmly with two screws.

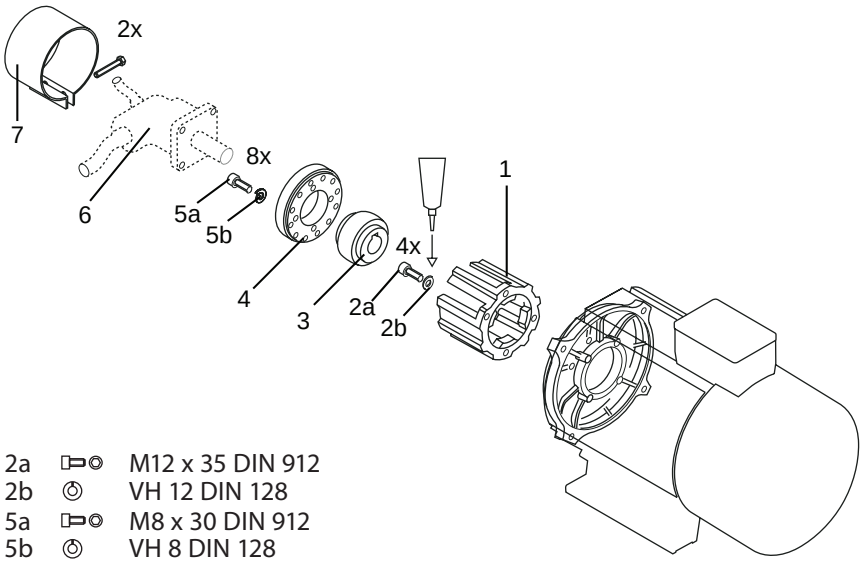

2a		M12 x 35 DIN 912
2b		VH 12 DIN 128
5a		M8 x 30 DIN 912
5b		VH 8 DIN 128

Figure 9 Assembly of flange mount hydraulic drive (generator model 160)

Built-in generators with switch cabinet for permanently installed power generation systems ≥ 12 kVA in fire engines

3.6.6 Assembly instructions for belt drive

Warning

Risk of accident

- Open drive belts and pulleys are a hazard.
  - ▶ Never operate the generator without a protective covering.
  - ▶ Never reach into a drive belt while it is running.

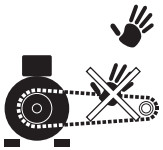

Important

- ▶ Do not strike the pulley on the shaft.
- ▶ Taper bushes are preferred for the attachment.

> Secure the belt pulley to the shaft with a key.
> Thread in a screw into the end face of the shaft to secure the belt pulley.
> Prevent this screw from being undone accidentally by placing a suitable locking washer underneath it.

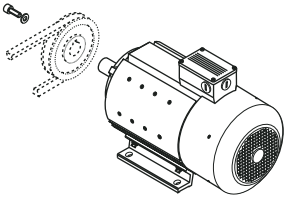

- Threaded hole in the shaft: M16 x 36 mm
- Tightening torque: M = 200 Nm
- Bolt grade 8.8

Important

- ▶ The axis of the power shaft must run absolutely parallel to the axis of the generator.
- ▶ The belt pulleys of both axes must lie flush to each other so that the belt runs absolutely straight.

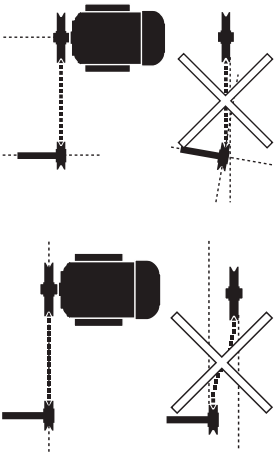

Important

► The drive belt must not sag loosely.

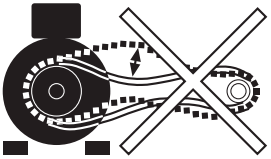

When using narrow belt pulleys of type SPA, the clearance between the axes must not exceed 800 mm. For permissible axis clearances for other belts, ask the manufacturer.

Maximum tension force (tension) of the drive belt on the shaft

F_{max} = 5,000 N at a max. 60 mm axial clearance from the point where the shaft exits the bearing plate. The belt tension must not exceed a radial force of 2,000 N at a max. axial clearance of 60 mm from the point where the shaft exits the bearing plate. If the belt pulley attachment to the shaft is placed further out, reduce the tension of the belt accordingly in order to balance out the increased leverage effect on the shaft.

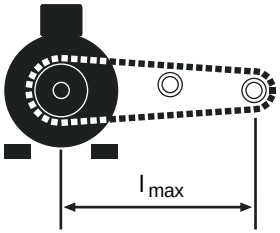

Quantity and type of the belts used

- Adapt the quantity and type of the belts used to the output of the generator.
- Observe the maximum belt tensioning force.

Built-in generators with switch cabinet for permanently installed power generation systems ≥ 12 kVA in fire engines

4 Installation of switch cabinet and electrical connection

Carefully read the safety instructions before installing the switch cabinet and the electrical connection to the generator section 4.1 as well as all applicable sections of this chapter and follow the instructions and information therein.

4.1 General safety instructions



Danger

Risk of injury and risk of damage!

- Opening or disassembling the generator puts the system at risk and compromises the safety of the user.
  - ► Never open or dismantle the generator.
  - ► The generator may only be opened by the manufacturer or an authority authorised by the manufacturer.
  - ► Only carry out the work described in this manual.





Danger

Danger to life through electric shock

- A grounding of the neutral conductor of the generator (N, neutral conductor) invalidates the “electrical separation” protective measure.
  - ► Never ground the neutral conductor of the generator.



Danger

Danger to life through electric shock

- During operation, the power generation system generates voltages that are potentially fatal.
  - ► Work on the electrical installations and equipment must only be carried out after the system has been switched off and is de-energised.
  - ► Switch off the drive unit before performing any inspection or maintenance work on the generator or switch cabinet. Prevent the drive unit from being switched back on by accident (e.g. remove the ignition key and keep somewhere safe).



⚠ Warning

Risk of injury and risk of damage!

- Inadequately qualified persons are at risk when working on the generator or switch cabinet and may damage the generator.
  - ► The installation work described in this chapter may only be carried out by authorised, qualified and specially trained personnel.





⚠ Warning

Risk of injury and risk of damage!

- The use of unauthorised third party parts can lead to malfunctions, damage or danger.
  - ► Only use third party parts expressly approved by the manufacturer for the installation.



Important

- These generators are not suitable for supplies to fixed distribution networks.
- These generators are designed for a certain performance and speed. They can be destroyed by voltage peaks and overloads.
  - ► Do not use the generator to supply building-site distribution boards or other fixed distribution networks (e.g. domestic installations).
  - ► Never connect the generator to the public electricity grid or combine with other power generation systems.
  - ► Never combine multiple generators.



Important

Before installing and using the power generation system, please read the operating manual fully and carefully. Only use the generator and the switch cabinet for the uses listed in the sections on “intended use” and only in accordance with the information in the operating manuals.

Do not make any modifications to the switch cabinet. Any modification, incorrect repair or use of unsuitable third party parts shall cause all warranty claims to lapse and the lapsing of the type approval according to the Equipment Safety Act (GSG) and the certification according to EU-/EEC directives. The manufacturer cannot assume any liability in such a case.

4.2 Requirements for the installation location

The switch cabinet must meet protection class IP43 at least. It is not explosion-protected. Do not operate in environments where there is a risk of explosion. Observe all additional regulations in this area.

Choose a suitable installation location for the switch cabinet so that the operating and control elements are visible on the front panel at all times, and unimpeded operation is possible. Observe the requirements for vehicles carrying tools and gears according to DIN 14555-3.

Do not spray the switch cabinet with high-pressure cleaners.

4.3 General provisions for installation

The basic requirement for safe, reliable and fault-free operation, electrical and mechanical safety is a technically and materially correct installation of the switch cabinet.

4.4 Installation

Follow the installation instructions when installing the switch cabinet:

- Secure the switch cabinet adequately and securely.
- Only use the provided mounting holes in the switch cabinet for the attachment.
- Introducing the supply line from the generator into the switch cabinet must meet protection class IP43 at least.
- Install the switch cabinet so that the operating and control elements fitted on the front panel are visible at all times, and unimpeded operation is possible.
- During installation, also note the requirements for vehicles carrying tools and gears according to DIN 14555-3.

4.5 Electrical connection

Prior to connection of the switch cabinet to the generator, read the safety instructions in section 4.1 and the connection instructions in this section 4.5 attentively and follow the instructions and information therein. Also note the instructions and requirements of the switch cabinet.

4.5.1 Instructions, laying of cables

When laying lines and cables, follow these instructions:

- Pay attention to the specified cross-sections. Dimension the lines sufficiently, based on the nominal current of the generator.
- It is crucial that you keep to the minimum bending radii specified by the cable manufacturer.
- Avoid abrasions on the cables, especially in the bending area of the cables.

4.5.2 Instructions, connecting the generator

Follow the connection instructions when connecting the generator:

- When opening the terminal box, make sure that the connecting wires of the generator controller built into the cover are not torn off or damaged.
- After opening the terminal box, remove the plug connector to the generator controller in the terminal box cover. The plug connector is mechanically coded and cannot be reversed inadvertently. Do not assemble the plug connector until immediately before closing the cover.
- Only use suitable waterproof screw fittings, protection class IP54 or higher, to introduce cables into the terminal box.
- Install the connecting wires in the terminal box with the utmost care.
- When closing the cover, make sure no connecting wires get jammed or crushed, and that the generator controller is not damaged.

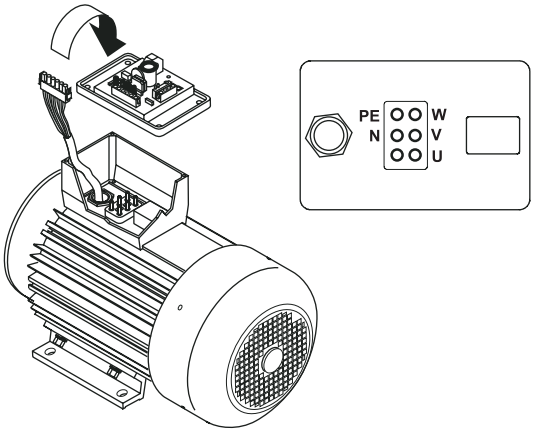

Figure 10 Terminal box, connection assignment on terminal board

Built-in generators with switch cabinet for permanently installed power generation systems ≥ 12 kVA in fire engines

4.5.3 Instructions for connecting the switch cabinet

Follow the connection instructions when connecting the switch cabinet:

- Observe the rotary field of the generator output voltage! Generally the generators run clockwise. In this case, the output voltage has a “clockwise field of rotation”. Generators can also be operated in anticlockwise rotation; the rotary field of the output voltage then switches to “anticlockwise rotation”. Where necessary, when connecting the switch cabinet, balance it out by rotating the phase conductor to get a clockwise rotating field at the three-phase power sockets of the switch cabinet.
- Pay attention to the enclosed circuit diagram for the switch cabinet during connection.

5 Operation

This chapter describes the operation and control of the power generation system. Depending on the power generation system equipment, deviations can arise. Reference is made to these deviations in the corresponding sections of this manual.

Before using the power generation system, carefully read the general safety instructions in section 5.1 and sections 5.2 to 5.5 and follow the instructions and information therein.

5.1 General safety instructions, operation



⚠ Danger

Danger to life through electric shock

- During operation, the power generation system generates voltages that are potentially fatal.
  - ► **Never** touch the generator, the switch cabinet or the devices attached to the power generation system with wet hands during operation.



⚠ Danger

Danger to life through electric shock

- Working on the generator or switch cabinet, visual inspections for maintenance purposes or cleaning work on the power generation system during operation can lead to potentially fatal injuries through electric shock.
  - ► Switch off the drive unit before performing any inspection or maintenance work on the generator or switch cabinet. Prevent the drive unit from being switched back on by accident (e.g. remove the ignition key and keep somewhere safe).



⚠ Danger

Risk of injury

- When protective coverings are not in use, there is a risk of injury through electric shock, moving parts and hot surfaces.
  - ► Only operate the generator with the fitted protective coverings proscribed for the drive in the regulations.

Built-in generators with switch cabinet for permanently installed power generation systems ≥ 12 kVA in fire engines



⚠ Warning

Risk of injury and risk of damage!

- The power generation system must be operated under certain conditions for fault-free operation.
  - ► Only operate the power generation system according to the indicated operating conditions and data.
  - ► In particular, this applies to the environment and cooling conditions and permissible current rating.



⚠ Warning

Risk of accident

- Devices which start up in an uncontrolled fashion can put persons at risk or injury them or cause damage or themselves be damaged.
  - ► Switch off all devices before you connect them to the power generation system.



⚠ Warning

Risk of explosion

- A discharge of sparks during operation is possible.
  - ► Do not operate the generator in environments where there is a risk of explosion.



⚠ Warning

Danger to life caused by electric shock and risk of damage.

- Water from a high-pressure cleaner can lead to the destruction of the switch cabinet or electric shock.
  - ► Never expose the generator or switch cabinet to high-pressure cleaner.





⚠ Warning

Risk of injury and risk of damage!

- Inadequately qualified persons are at risk when working on the generator or switch cabinet and may damage the generator.
  - ▶ The assembly, connection and commissioning of the iMAPLA system and work on the electrical systems may only be carried out by authorised, qualified and specially trained personnel.
  - ▶ Carry out all connection work according to applicable national regulations (in Germany: these include VDE specifications).



⚠ Caution

Burn hazard

- Parts of the generator can become very hot during and after the operation.
  - ▶ Allow the generator or parts of the generator to cool down before you touch them.



Important

- These generators are not suitable for supplies to fixed distribution networks.
- These generators are designed for a certain performance and speed. They can be destroyed by voltage peaks and overloads.
  - ▶ Do not use the generator to supply building-site distribution boards or other fixed distribution networks (e.g. domestic installations).
  - ▶ Never connect the generator to the public electricity grid or combine with other power generation systems.
  - ▶ Never combine multiple generators.



Important

Before installing and using the power generation system, please read the operating manual fully and carefully. Only use the generator and the switch cabinet for the uses listed in the sections on “intended use” and only in accordance with the information in the operating manuals.

5.2 Permissible operating conditions

Only use the generator and the switch cabinet when the following operating conditions have been met.

- Only connect devices whose voltage and frequency data in the rating plate match the information on the type plate of the power generation system.
- Do not overload the power generation system. The total power draw of all connected units must not exceed the output indicated for the current power generation system.
- The power generation system must have an unobstructed flow of cooling air and an unhindered cooling air discharge.
- The temperature of cooling air should not exceed 40 °C. If the cooling conditions are not met, do not the generator up to its full nominal output.
- If the generator is not sufficiently cooled, or in conditions which deviate from the permissible operating conditions, the output voltage of the generator will be reduced automatically. To prevent damage to connected devices, in this case it will be necessary to reduce the output connected to the generator

5.3 Working safely with electrical devices

Follow the following operating instructions to work safely with electrical devices.
Pay attention to the safety instructions for operation in section 5.1, page 56.



⚠ Danger

Risk of accident and injury

- There are risks associated with working with power generation systems and electrical equipment.
  - ► Only qualified, specially trained personnel are allowed to carry out work on electrical installations.
  - ► Before any work on electrical equipment, read the safety instructions in section 5.1, page 56 and follow them.
  - ► Read the following operating instructions and follow them.

- Devices which caused a shutdown by the insulation monitor and the "INSULATION FAULT" error indication, must not be operated from other power generation systems that have no insulation monitoring or from the public electricity supply network. Immediately put devices with insulation faults out of service and replace them or have them repaired by the device manufacturer or an authorised electrician company.
- Do not connect devices unless they are in a fully-functional and safe condition. The units and plug connectors must be clean and dry.



⚠ Warning

Risk of accident

- Devices which start up in an uncontrolled fashion can put persons at risk or injury them or cause damage or themselves be damaged.
  - ► Switch off all devices before you connect them to the power generation system.

Built-in generators with switch cabinet for permanently installed power generation systems ≥ 12 kVA in fire engines

- Depending on the range of use and application, when working with power generation systems, follow the instructions, requirements, provisions or recommendations from Employer's Liability Insurance Associations and trade associations. In particular, the German Equipment Safety Act (GSG) must be followed, as must relevant accident prevention requirements and the mining ordinances of the states. When using current power generation system outside the jurisdiction of the laws of the Federal Republic of Germany, check the suitability of the generator taking into account the relevant national provisions.
  If you have any questions, please get in touch with the system manufacturer directly.
- Only operate the power generation system under permissible operating conditions ⇨ section 1.1, page 16.
- Many portable electrical tools meet protection class II (protective insulation, labeling ⧈). Use such devices wherever possible. If devices of protection class I (i.e. with metal housing parts without protective insulation) are used, these must be fitted with a connection cable and a plug with PE connector. With such devices, the protective earth must be checked every work day to ensure the correct function (⇨ section 5.5.5, page 71).
- Carefully select, install, and maintain the lines for the distribution (e.g. extension lines and device connection lines). Regularly inspect the electrical lines. Replace faulty lines and cables. When connecting the extension lines, follow section 5.5.2, page 65.

5.4 Electrical safety devices, safety measures

The power generation system is fitted with an “insulation monitor with disconnection” and complies with the safety measure “electrical separation with potential equalization connector” according to VDE 0100, Part 551.

The power sockets built into the switch cabinet are secured against overcurrent and short circuit with line circuit breakers. The line circuit breakers are uniquely assigned to the relevant power sockets, ⇨ Figure 1, page 17.

There is no need to earth the power generation system (e.g. through an earthing rod) for the electrical safety measures mentioned above to work properly.



⚠ Danger

Danger to life through electric shock

- The emergency power socket which is given a special label is not protected by the insulation monitor. For this reason, only the “electrical separation” protective measure is effective for this power socket.
  - ► Only connect a single consumer to the emergency power socket. Failing to do so will suspend the protective measure.



⚠ Danger

Danger to life through electric shock

- A grounding of the neutral conductor of the generator (N, neutral conductor) invalidates the “electrical separation” protective measure.
  - ► Never ground the neutral conductor of the generator.

5.5 Power generation system operation



Danger

Risk of accident and injury

- There are risks associated with working with power generation systems and electrical equipment.
  - ► Before putting the generator into operation: carefully read all sections of chapter 5, in particular, the safety instructions in Section 5.1, page 56.

Check the correct function of the insulation monitor every day before starting work. Only put the generator into service when the check has showed that the insulation monitor was in correct working order.

5.5.1 Power sockets, controls and displays

Figure 11 shows all the operating- and control elements in the switch cabinet of the generator using an example. If the execution of the switch cabinet varies from the figure: precise arrangement of operating and control elements of your switch cabinet ⇨ separate operating manual for the switch cabinet.

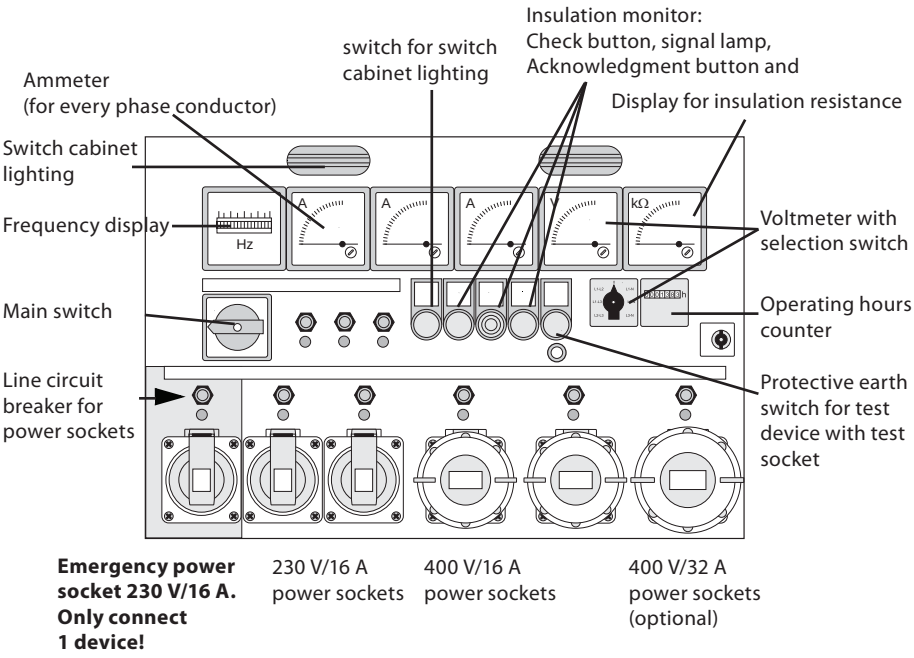

Figure 11 Power sockets, controls and displays on the switch cabinet (example)

5.5.2 Power distribution and connection of devices



Danger

Danger to life through electric shock

- Insulation monitors can mutually influence each other.
  - ► Do not connect any other insulation monitors downstream of the power generation system.



Warning

Risk of damage

- An overvoltage may arise when the pole-reversing switch is switched on.
  - ► Before switching over the rotary field, you must switch the optional pole-reversing switch to position “0”. Leave the pole-reversing switch in position “0” until all connected motors have come to a stop.



Important

Risk of damage

- The total power draw of all connected units must not exceed the output indicated for the current power generation system.
  - ► Only connect as many units as the generator output can supply sufficiently.
  - ► Do not overload the generator.



Important

Risk of damage

- Devices with deviating voltage and frequency may be damaged upon connection.
  - ► Only connect devices which have voltage and frequency data on their rating plate matching that for the power generation system.

Important

Risk of damage

- When using several devices on the AC power sockets at the same time (especially on devices with different power consumption ratings), temporary over and undervoltages may arise due to a switch-on delay in the neutral conductor.
  ► Do not use the line circuit breakers in the switch cabinet for switching the connected equipment on or off.

Important

- The power generation system is not suitable for supplying fixed distribution networks.
  ► Do not use the power generation system to supply building-site distribution boards or other fixed distribution networks (e.g. domestic installations).

Always close the hinged covers on power sockets on the switch cabinet not in use correctly.

When commissioning the power generation system and connecting consumers, proceed as follows:
> Carry out the every work day inspection of the insulation monitor.
⇨ Section 5.5.4, page 70.
> No devices are allowed to be connected to the power generation system.

> Switch off all devices to be connected (device switch to position “OFF” or “0”. Risk of accident caused by devices started up in an uncontrolled fashion!
> Start the drive unit.
> Wait until the drive unit has reached its nominal speed.
> Switch on the main switch on the switch cabinet. (Position “ON” or “I”).
> When wanting to connect devices of protection class I (devices with protective earth and non protective insulated metal housing parts), carry out the protective earth check for these devices every work day as per section 5.5.5., page 54.
> Connect the devices up and switch them on in sequence. Switch on the powerful units with high current consumption or high starting current first followed by the less powerful units.



⚠ Danger

Danger to life through electric shock

- The emergency power socket which is given a special label is not protected by the insulation monitor. For this reason, only the “electrical separation” protective measure is effective for this power socket.
  ► Only connect a single consumer to the emergency power socket. Failing to do so will suspend the protective measure.



⚠ Warning

Risk of injury and risk of damage!

- An even distribution across all three phase conductors of the power generation system is the ideal scenario.
  ► Wherever possible distribute the current drawn by the consumers evenly on the three phase conductors of the generator to ensure safe operation.



⚠ Warning

Risk of injury and risk of damage!

- Power sockets have load limits.
  - ► Do not exceed the maximum indicated amperage for power sockets.



Important

► After disconnecting the consumers from the switch cabinet, the hinged covers of the power sockets must be closed correctly.



Note

- Equipment powered by electric motors may need start-up currents which can be many factors higher than the indicated operating currents.
  - ► In case of doubt, please get in touch with the manufacturer.

Built-in generators with switch cabinet for permanently installed power generation systems ≥ 12 kVA in fire engines

5.5.3 Warning / disconnect with faulty insulation

All of the power sockets fitted in the switch cabinet (except for the emergency socket) are equipped with an insulation monitor. If the insulation of a connected line or device is faulty, the insulation monitor will disconnect all of the power sockets except for the emergency socket to protect persons working on the power generation system.

- The current insulation resistance is displayed on a display instrument on the switch cabinet (⇨ Figure 11, page 64). The scale on the display instrument is divided into separate colors according to the state of the insulation (“OK” = green, “Critical” = yellow, or “Poor” = red).

Warning when insulation value < 34.5 kΩ (equivalent to 150 Ω/V)

- When the insulation resistance lies between 23 kΩ and 34.5 kΩ, the warning lamp will light up Insulation fault and a warning buzzer will sound. In general, the power generation system can continue to be operated with all of the connected devices, though the faulty devices and/or cables should be located and disconnected as soon as possible to remedy the fault.
- To localize a faulty device or faulty cable, disconnect the devices / cables individually one after the other; at the same time, look for a change in the display insulation resistance on the switch cabinet.

Immediate disconnect when insulation value < 23 kΩ (equivalent to 100 Ω/V)

- When there is an insulation resistance less than 23 kΩ, all power sockets except for the emergency power socket are disconnected immediately; the warning lamp insulation fault lights up, and a warning buzzer sounds.
- In this case, immediately locate faulty devices and/or cables to remedy the fault, and disconnect them. The power sockets are not switched back on again until after the warning message was acknowledged and the insulation resistance is larger than 23 kΩ.
- To locate the faulty device or cable, one option is to disconnect all of the devices / cables, acknowledge the warning message and then connect the devices / cables to the generator one by one, watching the insulation resistance on the switch cabinet as you do so.

Acknowledging the warning message
Acknowledge the warning message of the insulation monitor by pressing the button Buzzer disconnection reset . The warning buzzer will then fall silent. If the insulation fault remains after acknowledgment, the warning lamp Insulation fault continues to light up.
After remedying the fault, press the acknowledgment button “Buzzer disconnect reset” again to switch off the warning lamp.

5.5.4 Check insulation monitor

Check the correct function of the insulation monitor every day before starting work. Only put the power generation system into service when the check showed that the insulation monitor was in correct working order.

Check the insulation monitor as follows
(Position of operating- and control elements ⇨ Figure 11, page 64):

> Remove all devices and cables connected to the power generation system.
> Start the drive unit.
> Perform the check when the generator is running.
> Switch on the main switch on the switch cabinet.
> Press the check button of the insulation monitor.
> The insulation monitor should now trip (warning lamp “insulation fault” lights up and the warning buzzer sounds).

Important

- The insulation monitor must trip.
  - ► If the insulation monitor does not trip, refrain from using the power generation system any longer.
  - ► In this case, have the power generation system sent for repairs (⇨ chapter 7, page 79).

> After approx. 5 seconds, acknowledge the warning message by pressing the button Buzzer disconnect reset .

The warning lamp goes out and the warning buzzer falls silent.

> After successfully checking the insulation monitor, the power generation system is now ready for operation.

Built-in generators with switch cabinet for permanently installed power generation systems ≥ 12 kVA in fire engines

5.5.5 Protective earth check for devices of protection class I

With devices of protection class I (devices with protective earth and non protective insulated metal housing parts), carry out the protective earth check for these devices every work day. Only put such devices into service when the check showed that the protective earth was in correct working order.

Check the protective earth as follows
(Position of the test device ⇨ Figure 11, page 64):

> Start the drive unit.

Only perform the check when the generator is running.

> Switch on the main switch on the switch cabinet.
> Insert the device to the checked into the switch cabinet (with an extension cable where necessary).
> Insert the test line to the test socket of the switch cabinet
> Fix the probe of the test line to a corresponding testing point on the device (e.g. metallic housing part).
> If the protective earth connection is OK, the signal lamp of the test device will light up.

5.6 Checking the generator

If a generator fails, it can be inspected to determine the cause of the fault.



Danger

Risk of injury and risk of damage!

- Opening or disassembling the generator puts the system at risk and compromises the safety of the user.
  - ▶ Never open or dismantle the generator.
  - ▶ The generator may only be opened by the manufacturer or an authority authorised by the manufacturer.
  - ▶ Only carry out the work described in this manual.



5.6.1 Description

> Where possible, check all resistance values according to the data sheet
> Carry out a visual check.

If anomalies are found, e.g. faulty electronic parts, signs of smoldering or fire, this often reveals the cause of the fault.

The additional documents needed for the inspection

- instructions for restoring remanency
- Data sheet for generator

- The connections of the main winding U/V/W are the connections brown / white/black.
- The connection N (blue) is the Neutral point of the main winding.
- The field winding is connected to the red and gray line of the controller connector (6-pole AMP connector).



Important

▶ Before the insulation measurements with high-voltage, disconnect and unplug all electronics components.

Built-in generators with switch cabinet for permanently installed power generation systems ≥ 12 kVA in fire engines

5.6.2 Procedure

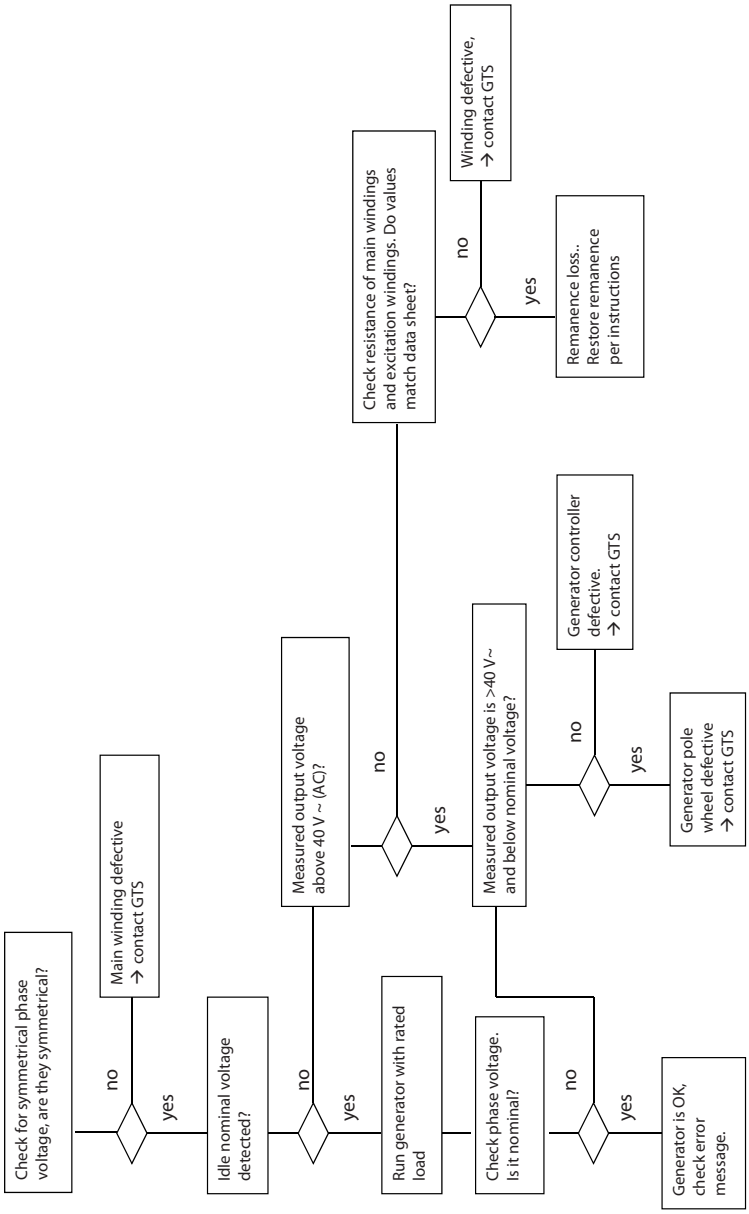

6 Care and maintenance

All generator components are in principle maintenance-free. However, carry out the maintenance work listed in the maintenance summary, section 6.1 regularly and in a timely fashion in order to ensure a reliable operation of the generator.

Important

- In addition to the work given here, checks on the drive system may be necessary as set out in the requirements and regulations of the drive / system manufacturer. This also includes installed protective coverings.
  - ► Observe the maintenance instructions of the drive or system manufacturer.

⚠ Danger

Risk of injury and risk of damage!

- Opening or disassembling the generator puts the system at risk and compromises the safety of the user.
  - ► Never open or dismantle the generator.
  - ► The generator may only be opened by the manufacturer or an authority authorised by the manufacturer.
  - ► Only carry out the work described in this manual.



Immediately rectify any damage and defects to the generator, regardless of the maintenance intervals.
Do not put the generator back into service until the defects have been rectified.

> Only qualified, specially trained personnel are allowed to carry out work on electrical installations.

Built-in generators with switch cabinet for permanently installed power generation systems ≥ 12 kVA in fire engines

6.1 Maintenance overview

Interval	Maintenance work	Executed by
every work day	Check insulation monitor ⇨ Section 5.5.4, page 70.	user
	Check the protective earth of connected devices with protection class I. ⇨ Section 5.5.5, page 71.	user
monthly	On the generator: • Visual check for contamination or damage. Clean where necessary. • Check the information and rating plates, where necessary clean or replace them. • Check the cooling air openings for contaminants and blockages, clean where necessary. ⇨ Section 6.3, page 77.	user
	front panel of switch cabinet: • Visual check for contamination or damage. Clean where necessary. • Check the covers and power socket covers to ensure they are sealed tight. ⇨ Section 6.3, page 77.	user
every 5,000 operating hours every 20,000 operating hours	Check ball bearing using a “sound check”. Replace if necessary (rough running noises of the bearing).	qualified electrician
	Replace the ball bearings. The standard maintenance interval for replacement of the ball bearing is 20,000 hours. Replace the ball bearing earlier (⇨ check every 5,000 hours) where necessary. ⇨ Section 6.4.1, page 79.	manufacturer

6.2 General safety instructions, care and maintenance

Danger

Danger to life through electric shock

- During operation, the power generation system generates voltages that are potentially fatal.
  - ▶ Work on the electrical installations and equipment must only be carried out after the system has been switched off and is de-energised.
  - ▶ Switch off the drive unit before performing any inspection or maintenance work on the generator or switch cabinet. Prevent the drive unit from being switched back on by accident (e.g. remove the ignition key and keep somewhere safe).

Warning

Risk of injury and risk of damage!

- Inadequately qualified persons are at risk when working on the generator or switch cabinet and may damage the generator.
  - ▶ The assembly, connection and commissioning of the power generation system and work on the electrical systems may only be carried out by authorised, qualified and specially trained personnel.
  - ▶ Carry out all connection work according to applicable national regulations (in Germany: these include VDE specifications).

Warning

Danger to life caused by electric shock and risk of damage.

- Water from a high-pressure cleaner can lead to the destruction of the switch cabinet or electric shock.
  - ▶ Never expose the generator or switch cabinet to high-pressure cleaner.



Built-in generators with switch cabinet for permanently installed power generation systems ≥ 12 kVA in fire engines



⚠ Warning

Risk of injury and risk of damage!

- The use of unauthorised third party parts can lead to malfunctions, damage or danger.
  - ► Only use third party parts expressly approved by the manufacturer for the installation.

6.3 Visual check / cleaning work performed by the user



⚠ Danger

Danger to life through electric shock

- Working on the generator or switch cabinet, visual inspections for maintenance purposes or cleaning work on the power generation system during operation can lead to potentially fatal injuries through electric shock.
  - ► Switch off the drive unit before performing any inspection or maintenance work on the generator or switch cabinet. Prevent the drive unit from being switched back on by accident (e.g. remove the ignition key and keep somewhere safe).



⚠ Caution

Burn hazard

- Parts of the generator can become very hot during and after the operation.
  - ► Allow the generator or parts of the generator to cool down before you touch them.

Read and follow the chapter on general safety information section 6.2 as well as the safety instructions indicated here.
The following work must be carried out by the user at monthly intervals.

- Check the generator housing for externally visible damage and to ensure that the connector is seated correctly; also check for excessive contamination which could impair the cooling system. Where necessary, clean the generator with a damp cloth.
- Check the front panel of the switch cabinet and the installed power sockets, operating and control elements for externally visible damage and contamination. Where necessary, clean the front panel of the switch cabinet with a damp cloth. Check that the hinged covers of the power sockets box are free of damage and seal tightly.
- Check whether the sign attached to the generator for the safety and warning information and the rating plate is easy to read. Clean the signs where necessary.
- Inspect the cooling air openings on the reverse side of the generator for dirt which could impede the flow of cooling air. If necessary, clean with a damp cloth.

6.4 Maintenance work carried out by authorised personnel



⚠ Warning

Risk of injury and risk of damage!

- Inadequately qualified persons are at risk when working on the generator or switch cabinet and may damage the generator.

  ► The assembly / disassembly of generator as well as the maintenance, service and replacement work may only be carried out by authorised and qualified technicians.

Read and follow the safety instructions in section 6.2 as well as the safety instructions indicated here.

Built-in generators with switch cabinet for permanently installed power generation systems ≥ 12 kVA in fire engines

6.4.1 Replacing the ball bearings

Replace the ball bearings of the generator at least every 20,000 operating hours. If rough running noises are detected during the regular check on the ball bearings specified for every 5,000 operating hours, replace the ball bearing earlier.



Danger

Risk of injury and risk of damage!

- Opening or disassembling the generator puts the system at risk and compromises the safety of the user.
  - ► Never open or dismantle the generator.
  - ► The generator may only be opened by the manufacturer or an authority authorised by the manufacturer.
  - ► Only carry out the work described in this manual.



Carry out disassembly of generator as shown in chapter 8.

7 Repairs

Only the work described in chapter 6 is allowed during maintenance. Additional work may be carried out by the manufacturer only.



Danger

Risk of injury and risk of damage!

- Opening or disassembling the generator puts the system at risk and compromises the safety of the user.
  - ► Never open or dismantle the generator.
  - ► The generator may only be opened by the manufacturer or an authority authorised by the manufacturer.
  - ► Only carry out the work described in this manual.



8 Disassembly

8.1 Safety instructions



⚠ Danger

Danger to life through electric shock

- Working on the generator or switch cabinet during operation can lead to potentially fatal injuries caused by electric shock.
  - ► Switch off the drive unit before performing any inspection or maintenance work on the generator or switch cabinet. Prevent the drive unit from being switched back on by accident (e.g. remove the ignition key and keep somewhere safe).



⚠ Warning

Risk of injury and risk of damage!

- Inadequately qualified persons are at risk when working on the generator or switch cabinet and may damage the generator.
  - ► The assembly / disassembly of generator as well as the maintenance, service and replacement work may only be carried out by authorised and qualified technicians.



⚠ Caution

Burn hazard

- Parts of the generator can become very hot during and after the operation.
  - ► Allow the generator or parts of the generator to cool down before you touch them.

8.2 Disassembly

Carry out disassembly of generator according to the description of the assembly of in Chapters 3 and 4.

Built-in generators with switch cabinet for permanently installed power generation systems ≥ 12 kVA in fire engines

9 Transport and storage



Note

- ▶ Transport and store the generators and the switch cabinets in a dry space and protect against water.
- ▶ Only transport or store the generator in the as-delivered condition with packaging and safety devices attached.

9.1 Generator

Generators in the factory are bolted down for transport on a pallet and are packaged to protect them from damage and moisture ingress.

Lifting eye screws have been attached to the generator to secure the lifting equipment. Secure the lifting equipment to the generator exclusively using this ring screws. Only use suitable lifting equipment.

If ring screws are not attached to the generator in the factory, they must be subsequently attached in order to lift the generator.

2-pole generators

	DWG (BL) 13/7-2 ZE	DWG (BL) 17/7-2 ZE	DWG (BL) 23/12-2 ZE	DWG (BL) 30/15-2 ZE	DWG (BL) 40/14-2 ZE
Weight approx.	65 kg	84 kg	121 kg	153 kg	184 kg

4-pole generators

	DWG (BL) 13/7-4 ZE	DWG (BL) 17/7-4 ZE	DWG (BL) 23/12-4 ZE	DWG (BL) 30/15-4 ZE	DWG (BL) 40/14-4 ZE
Weight approx.	86 kg	130 kg	153 kg	178 kg	205 kg

Temperature range and air humidity

Permissible temperatures:	
Transport:	-25 °C to +60 °C
Storage:	-20 °C to +50 °C
Permissible relative humidity:	
Transport:	95%, non-condensing
Storage:	95%, non-condensing

9.2 Switch cabinet

Screw switch cabinets for transport onto a pallet or pack into suitable transport cases and protect them against damage and moisture ingress.

Where necessary, fix the switch cabinets for transportation using straps, belts, or similar.
Also see the notes in the operating guide of the switch cabinet.

Weight (mass):	approx. 25 kg (depending on the type and execution)
Permissible temperatures:	
Transport:	-25 °C to +60 °C
Storage:	-20 °C to +50 °C
Permissible relative humidity:	
Transport:	95%, non-condensing
Storage:	95%, non-condensing

Built-in generators with switch cabinet for permanently installed power generation systems ≥ 12 kVA in fire engines

10 Decommissioning, storage, disposal

Carry out removal and decommissioning of power generation systems according to the descriptions in the chapter 8.

After removal, pack and store power generation systems which are still operable according to the Transport and Storage chapter.

Label power generation systems that are no longer operable as appropriate, and dispose of them or send to a recycling center according to the applicable legal requirements. More information is available from the relevant environmental authorities or manufacturers.

10.1 Disposal instructions

Generator

Generator housing	Aluminium
Fan wheel cover	Iron / steel
Fan wheel	Polypropene
Rotor / shaft	Iron / steel
Windings	Copper, impregnated with modified Esther imides (THEIC)
Electronic parts	Dispose of it according to the valid legal directives

Switch cabinet

Switch cabinet housing	Coated sheet steel
Mounted instruments and devices	Dispose of it according to the valid legal directives
Cables / lines	PVC-insulated copper cables

11 Spare parts

11.1 Generator

Obtain the generator ID and serial number from the rating plate.

Item designation	Item code
Housing / stator	1010
Footer	1030
Pole wheel	2010
Ball bearing B side	2110
Ball bearing A side	2111
B bearing plate	3010
A bearing plate	4010
Blades	5110
Cover	5130
Controller LCAR4	5400
Terminal box	5150
Terminal board	1020

> When ordering spare parts, always specify the Generator ID, serial number, item designation and item code.

Order example: blades for DWG (BL) 13/7-2 ZE:
Generator ID 7640, serial number 654321, blades 5110

You can find additional information and assistance for technical problems in our service portal online.

Built-in generators with switch cabinet for permanently installed power generation systems ≥ 12 kVA in fire engines

12 Index

Symbole

2-pole generators 20
4-pole generators 20

A

Acknowledge warning message 70
Air humidity 82
Alignment of drive shaft 35
Assembly example, drive shaft 36,37
Assembly of flange mount 39,46

B

Ball bearing 84
Bearing plate 84
Belt drive, assembly 40
Belt pulley 18

C

CEE power sockets 22
Check generator 72
Check insulation monitor 70
Check the protective earth 71
Circuit diagram 16
Clamping hub connection 36
Components 16
Cone hub connection 37
Connecting equipment 65
Connection assignment 54
Contents 3
Control elements 63
Controller 84
Cooling 43
Cooling air 33,44
Cooling instructions 32
Current distribution 65

D

Decommissioning 83
Disassembly for flange mount 38,45
Disassembly of power generation system 80
Displays 63
Disposal 83
Disposal instructions 83
Drive shaft 18,36,37,45
Drive shaft, assembly 34
Drive types 18

E

Electrical connection, generator 54
Electrical connection, switch cabinet 53,55
Emergency power socket 22

F

Faulty insulation 69
Footer 84
Frequency display 22
Function, generator 19

G

General instructions, installation for generator 28
Generator controller 25
Generators of model 132 31
Generators of model 162 42

H

Housing 84
Hydraulic drive 45
Hydraulic drive, assembly 38
Hydraulic motor 18

I

Installation dimensions and assembly 31
Installation location, switch cabinet 52
Installation of electrical connection 49
Installation of generator 26
Installation of switch cabinet 49
Installation of switch cabinet, regulation 52
Installation positions 30

Instructions on the installation position for generator 28
Insulation monitor 22
Insulation value 69
Intended use 6

L

Laying of cables 53
Line circuit breaker 22

M

Main circuit breaker 22
Maintenance and care 74
Maintenance overview 75
Maintenance work 78
Manufacturer's address 8
Minimum clearances 32,43

N

Norms and directives 14

O

Operating conditions 59
Operating hours counter 22
Operation 56

P

Pole wheel 84
Power sockets 63
Protective earth test device 22

Q

Qualified personnel 6

R

Repairs 79
Replace ball bearing 79

S

Safety devices 62
Safety instructions, installation 10,26,49
Safety instructions legend 2
Safety instructions, operation 56
Safety measures 62
Serial number(s) 84
Spare parts 84
Stator 84
Storage 81,83
Switch cabinet 21
Switch cabinet form AA 21
Switch cabinet form BB 23
Switch cabinet form CC 23
Switch cabinet lighting 22

T

Technical data 24
Temperature 33,44
Temperature range 82
Tension force, drive belts on shaft 41,48
Terminal board 84
Terminal box 54,84
Transport 81
Two-pole power socket 22

V

Versions, Generator 19
Voltmeter 22

W

Working with electrical equipment 60

Generator. Technik. Systeme.

Ziegelfeldstraße 62 + 65 // D-73563 Mögglingen //
T. +49 (0) 71 74 8 98 00-0 // **F.** +49 (0) 71 74 8 98 00-25 //
E. info@gts-generator.com // **W.** www.gts-generator.com

Original operating manual